1. General Description

A: SPECIFICATION

Item		Specification
Fuel tank	Capacity	60 ℓ (15.9 US gal, 13.2 Imp gal)
	Location	Under rear seat
Fuel pump	Type	Impeller
	Shutoff discharge pressure	450 — 677 kPa (4.59 — 6.9 kg/cm^2, 65.27 — 98.2 psi)
	Discharge rate	Except for STI model: 145 ℓ (38.3 US gal, 31.9 Imp gal)/h or more STI model: 165 ℓ (43.6 US gal, 36.3 Imp gal)/h or more [12 V at 300 kPa (3.06 kg/cm^2, 43.5 psi)]
Fuel filter		In-tank type

B: COMPONENT

1. INTAKE MANIFOLD

- **Except for STI model**

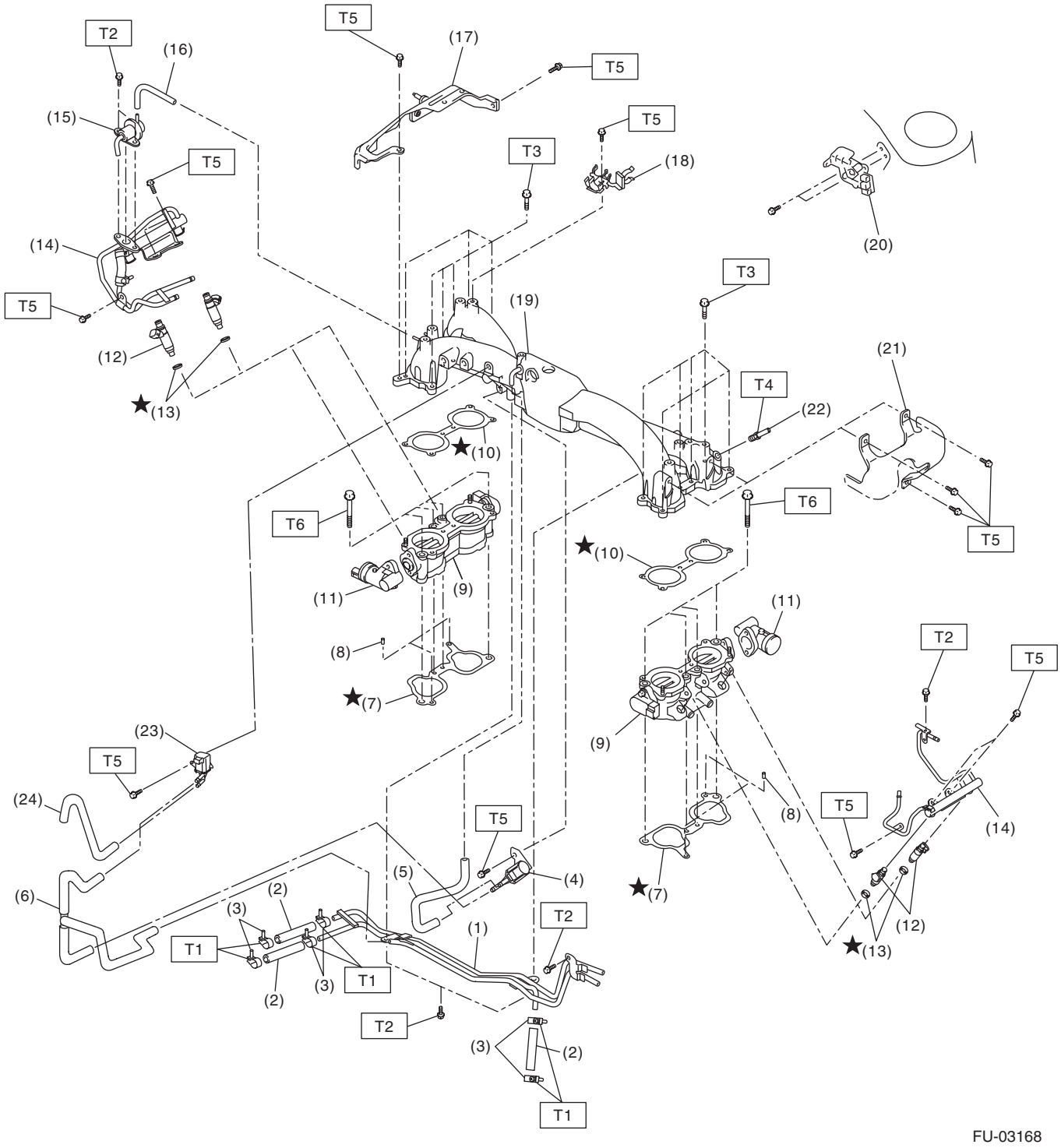

(1) Fuel pipe ASSY
(2) Fuel hose
(3) Clamp
(4) Purge control solenoid valve 1
(5) Vacuum hose A
(6) Vacuum control hose
(7) Intake manifold gasket
(8) Guide pin
(9) Tumble generator valve ASSY
(10) Tumble generator valve gasket
(11) Tumble generator valve actuator
(12) Fuel injector
(13) O-ring
(14) Fuel injector pipe
(15) Pressure regulator
(16) Pressure regulator hose
(17) Fuel pipe protector RH
(18) Blow-by hose stay
(19) Intake manifold
(20) Wastegate control solenoid valve ASSY
(21) Fuel pipe protector LH
(22) Nipple
(23) Purge control solenoid valve 2
(24) Vacuum hose B

Tightening torque:N·m (kgf-m, ft-lb)	
T1:	***1.25 (0.13, 0.34)***
T2:	***6.4 (0.65, 4.7)***
T3:	***8.25 (0.84, 6.1)***
T4:	***17 (1.73, 12.5)***
T5:	***19 (1.94, 14.0)***
T6:	***25 (2.5, 18.1)***

- **STI model**

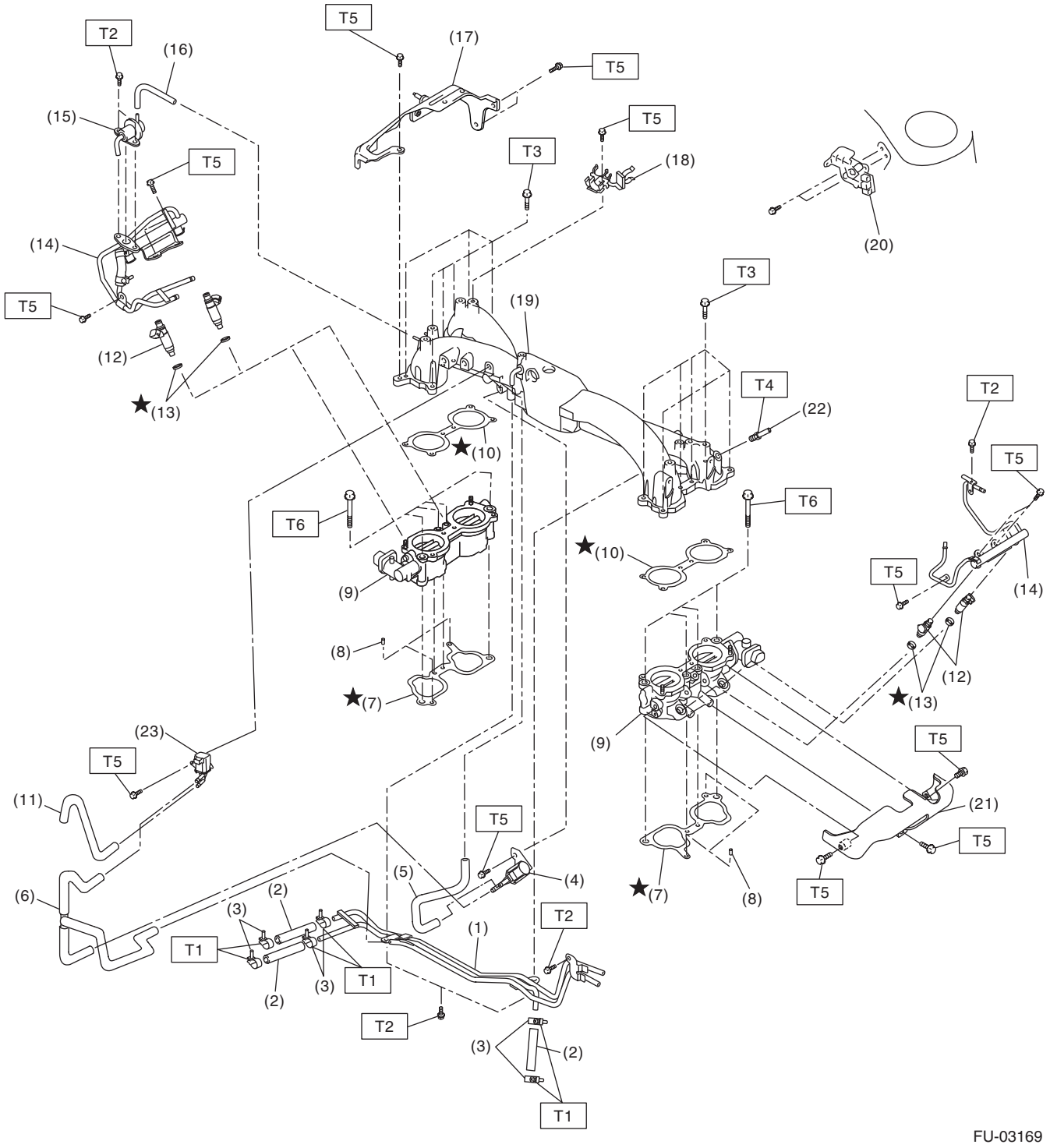

FU-03169

(1) Fuel pipe ASSY
(2) Fuel hose
(3) Clamp
(4) Purge control solenoid valve 1
(5) Vacuum hose A
(6) Vacuum control hose
(7) Intake manifold gasket
(8) Guide pin
(9) Tumble generator valve ASSY
(10) Tumble generator valve gasket
(11) Vacuum hose B
(12) Fuel injector
(13) O-ring
(14) Fuel injector pipe
(15) Pressure regulator
(16) Pressure regulator hose
(17) Fuel pipe protector RH
(18) Blow-by hose stay
(19) Intake manifold
(20) Wastegate control solenoid valve ASSY
(21) Fuel pipe protector LH
(22) Nipple
(23) Purge control solenoid valve 2

Tightening torque:N·m (kgf-m, ft-lb)
T1: 1.25 (0.13, 0.34)
T2: 6.4 (0.65, 4.7)
T3: 8.25 (0.84, 6.1)
T4: 17 (1.73, 12.5)
T5: 19 (1.94, 14.0)
T6: 25 (2.5, 18.1)

2. AIR INTAKE SYSTEM

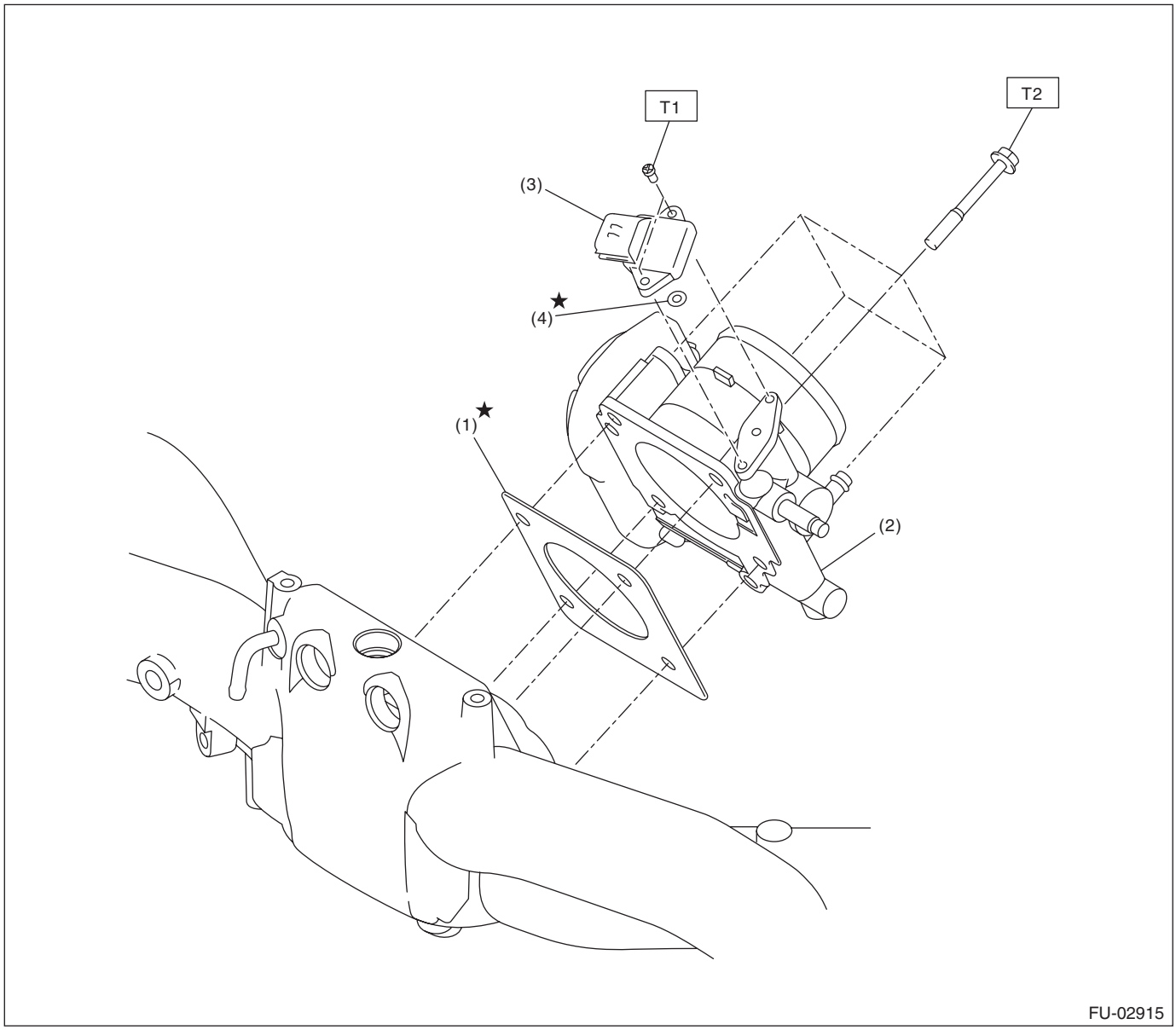

(1) Gasket
(2) Throttle body
(3) Manifold absolute pressure sensor
(4) O-ring

Tightening torque:N·m (kgf-m, ft-lb)
T1: 1.6 (0.16, 1.2)
T2: 8 (0.8, 5.9)

3. CRANKSHAFT POSITION, CAMSHAFT POSITION AND KNOCK SENSORS

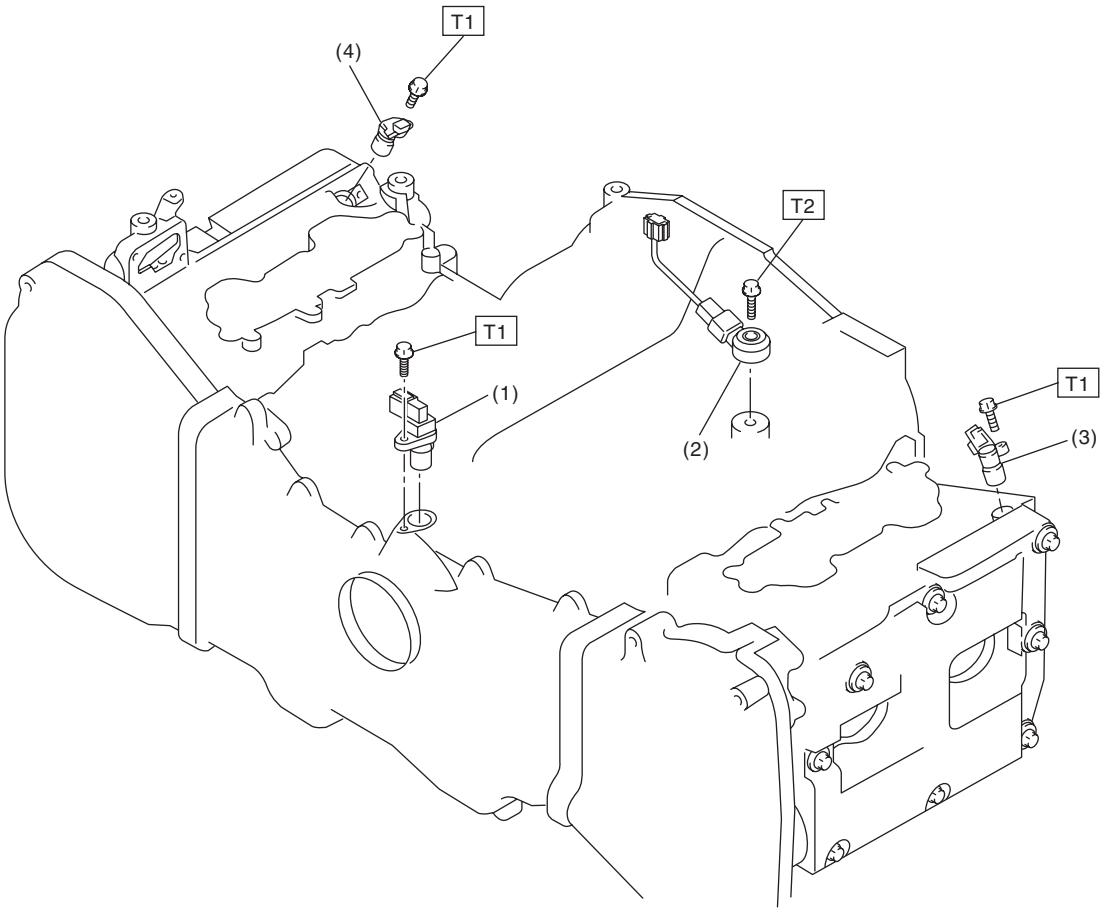

FU-01036

(1) Crankshaft position sensor
(2) Knock sensor
(3) Camshaft position sensor LH
(4) Camshaft position sensor RH

Tightening torque:N·m (kgf-m, ft-lb)
T1: 6.4 (0.65, 4.7)
T2: 24 (2.4, 17.4)

4. FUEL TANK

- **Except for STI model**

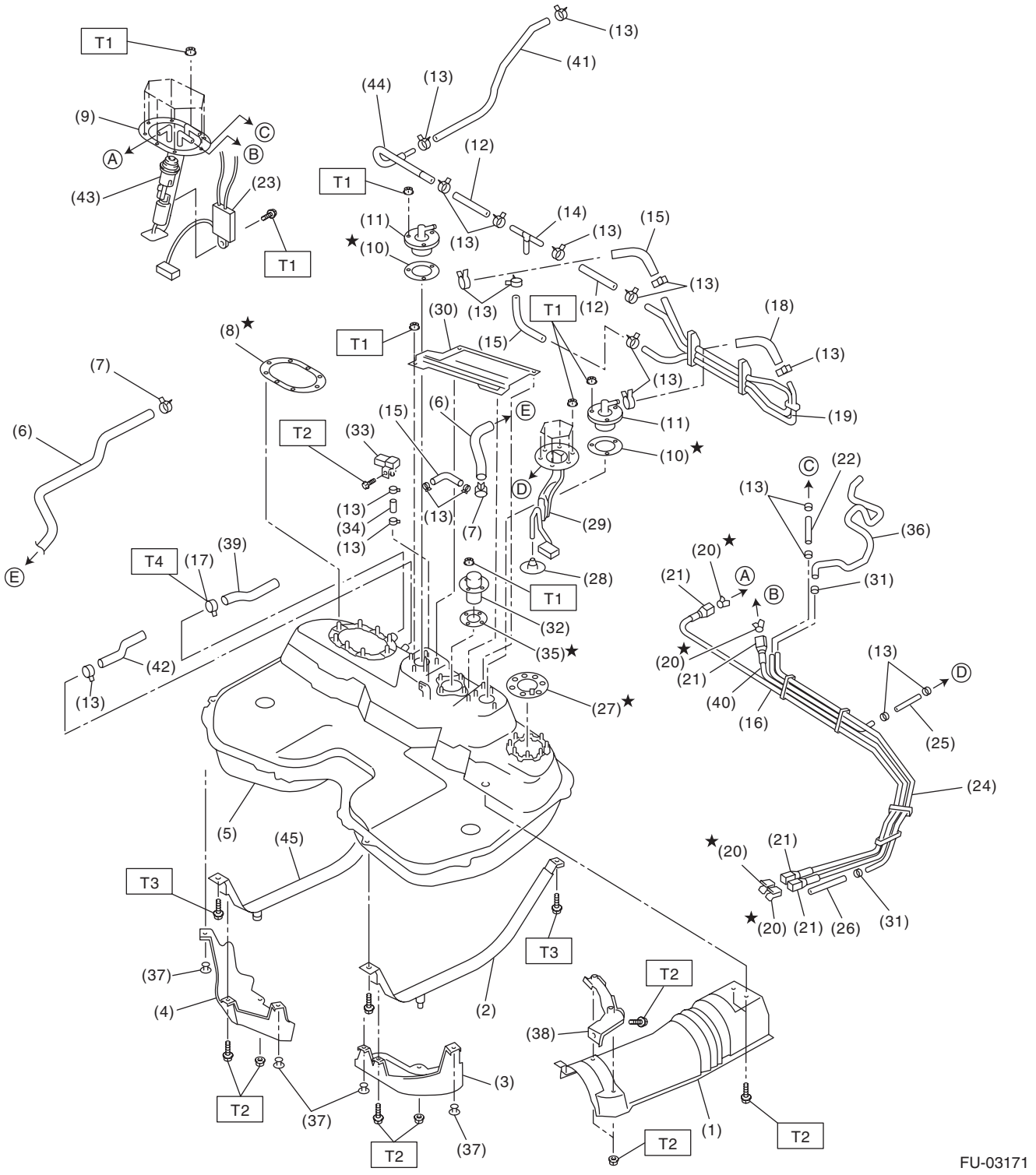

(1) Heat shield cover
(2) Fuel tank band LH
(3) Protector LH
(4) Protector RH
(5) Fuel tank
(6) Canister hose A
(7) Clamp
(8) Fuel pump gasket
(9) Fuel pump ASSY
(10) Fuel cut valve gasket
(11) Fuel cut valve
(12) Evaporation hose A
(13) Clip
(14) Joint pipe
(15) Evaporation hose B
(16) Fuel delivery tube
(17) Clamp
(18) Evaporation hose C
(19) Evaporation pipe ASSY
(20) Retainer
(21) Quick connector
(22) Jet pump hose A
(23) Fuel level sensor
(24) Fuel pipe ASSY
(25) Jet pump hose B
(26) Evaporation hose D
(27) Fuel sub level sensor gasket
(28) Jet pump filter
(29) Fuel sub level sensor
(30) Protect cover
(31) Clip
(32) Vent valve
(33) Fuel tank pressure sensor
(34) Fuel tank pressure sensor hose
(35) Vent valve gasket
(36) Purge hose
(37) Clip
(38) Cover bracket
(39) Fuel filler hose
(40) Fuel return tube
(41) Evaporation hose E
(42) Evaporation hose F
(43) Fuel filter
(44) Evaporation pipe
(45) Fuel tank band RH

Tightening torque:N·m (kgf-m, ft-lb)	
T1:	***4.4 (0.45, 3.3)***
T2:	***7.4 (0.75, 5.4)***
T3:	***33 (3.4, 25)***
T4:	***1.96 (0.20, 1.45)***

- **STI model**

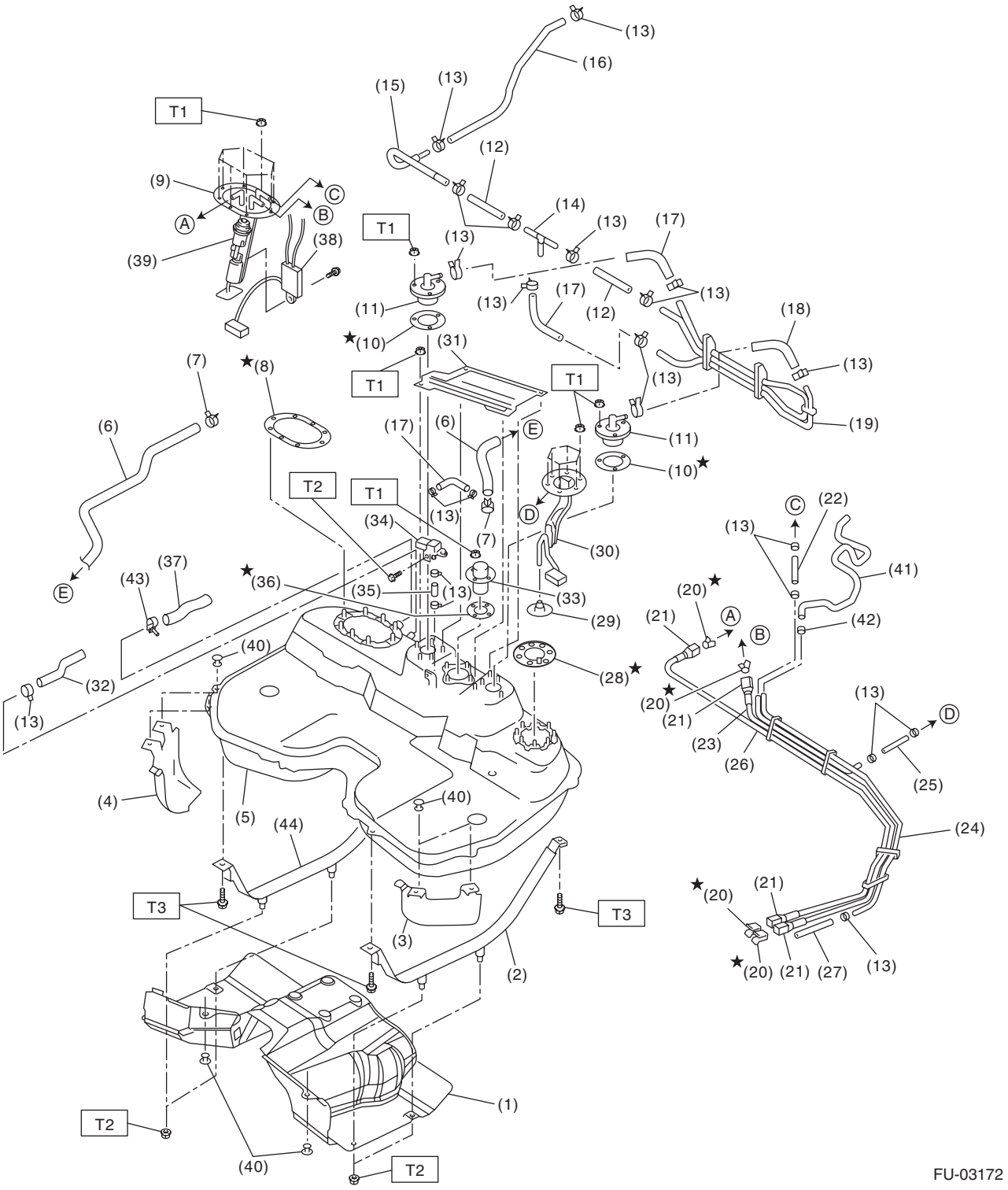
(13)
(16)
(15)
(13)
T1
(12)
(9)
C
B
A
(14)
(13)
(17)
T1
(13)
(38)
(39)
(11)
(13)
(17)
(12)
(13)
(18)
★(10)
(31)
(7)
★(8)
T1
T1
(13)
(13)
(19)
(6)
(17)
(6)
E
(11)
(10)★
T2
T1
(13)
D
C
(22)
(34)
(7)
(13)
(30)
(37)
(41)
(43)
★(36)
(35)
(13)
(33)
(20)★
E
(29)
(21)
A
B
(42)
(40)
(28)★
(32)
(20)★
(21)
(13)
(13)
D
(23)
(26)
(25)
(4)
(40)
(5)
(44)
(24)
T3
T3
★(20)
(21)
(3)
(2)
★(20)
(21)
(27)
(13)
(1)
T2
(40)
T2
FU-03172

(1) Heat shield cover
(2) Fuel tank band LH
(3) Protector LH
(4) Protector RH
(5) Fuel tank
(6) Canister hose A
(7) Clamp
(8) Fuel pump gasket
(9) Fuel pump ASSY
(10) Fuel cut valve gasket
(11) Fuel cut valve
(12) Evaporation hose A
(13) Clip
(14) Joint pipe
(15) Evaporation pipe
(16) Evaporation hose B
(17) Evaporation hose C
(18) Evaporation hose D
(19) Evaporation pipe ASSY
(20) Retainer
(21) Quick connector
(22) Jet pump hose A
(23) Fuel return tube
(24) Fuel pipe ASSY
(25) Jet pump hose B
(26) Fuel delivery tube
(27) Evaporation hose E
(28) Fuel sub level sensor gasket
(29) Jet pump filter
(30) Fuel sub level sensor
(31) Protector cover
(32) Evaporation hose F
(33) Vent valve
(34) Fuel tank pressure sensor
(35) Fuel tank pressure sensor hose
(36) Vent valve gasket
(37) Fuel filler hose
(38) Fuel level sensor
(39) Fuel filter
(40) Clip
(41) Evaporation hose G
(42) Clamp
(43) Clamp
(44) Fuel tank band RH

Tightening torque:N·m (kgf-m, ft-lb)

T1: 4.4 (0.45, 3.3)
T2: 7.4 (0.75, 5.4)
T3: 33 (3.4, 25)

5. FUEL LINE

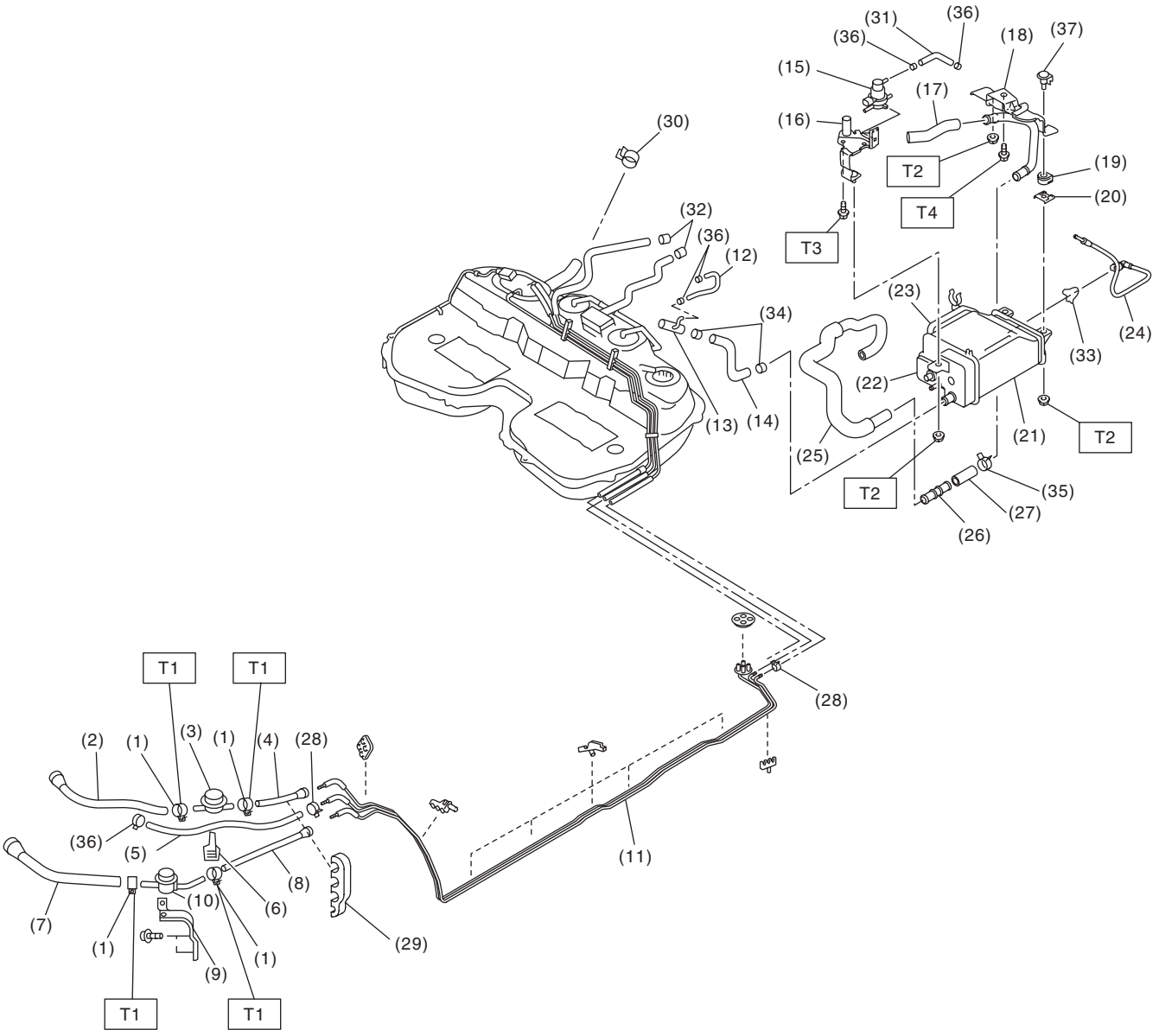

FU-03173

(1) Clamp
(2) Fuel return hose A
(3) Fuel damper valve (return)
(4) Fuel return hose B
(5) Evaporation hose A
(6) Clip
(7) Fuel delivery hose A
(8) Fuel delivery hose B
(9) Fuel damper valve bracket
(10) Fuel damper valve (Delivery)
(11) Fuel pipe ASSY
(12) Evaporation hose B
(13) Joint pipe
(14) Canister hose A
(15) Pressure control solenoid valve
(16) Pressure control solenoid valve bracket
(17) Drain hose C
(18) Canister upper bracket
(19) Cushion rubber
(20) Canister lower bracket
(21) Canister
(22) Drain valve
(23) Drain filter
(24) Pressure control solenoid valve tube
(25) Drain hose A
(26) Connector drain
(27) Drain hose B
(28) Clamp
(29) Clip
(30) Clamp
(31) Pressure control solenoid valve hose
(32) Clamp
(33) Retainer
(34) Clamp
(35) Clamp
(36) Clamp
(37) Canister bracket spacer

Tightening torque:N·m (kgf-m, ft-lb)	
T1:	***1.25 (0.13, 0.94)***
T2:	***23 (2.3, 16.6)***
T3:	***25 (2.5, 18.1)***
T4:	***33 (3.4, 25)***

6. FUEL FILLER PIPE

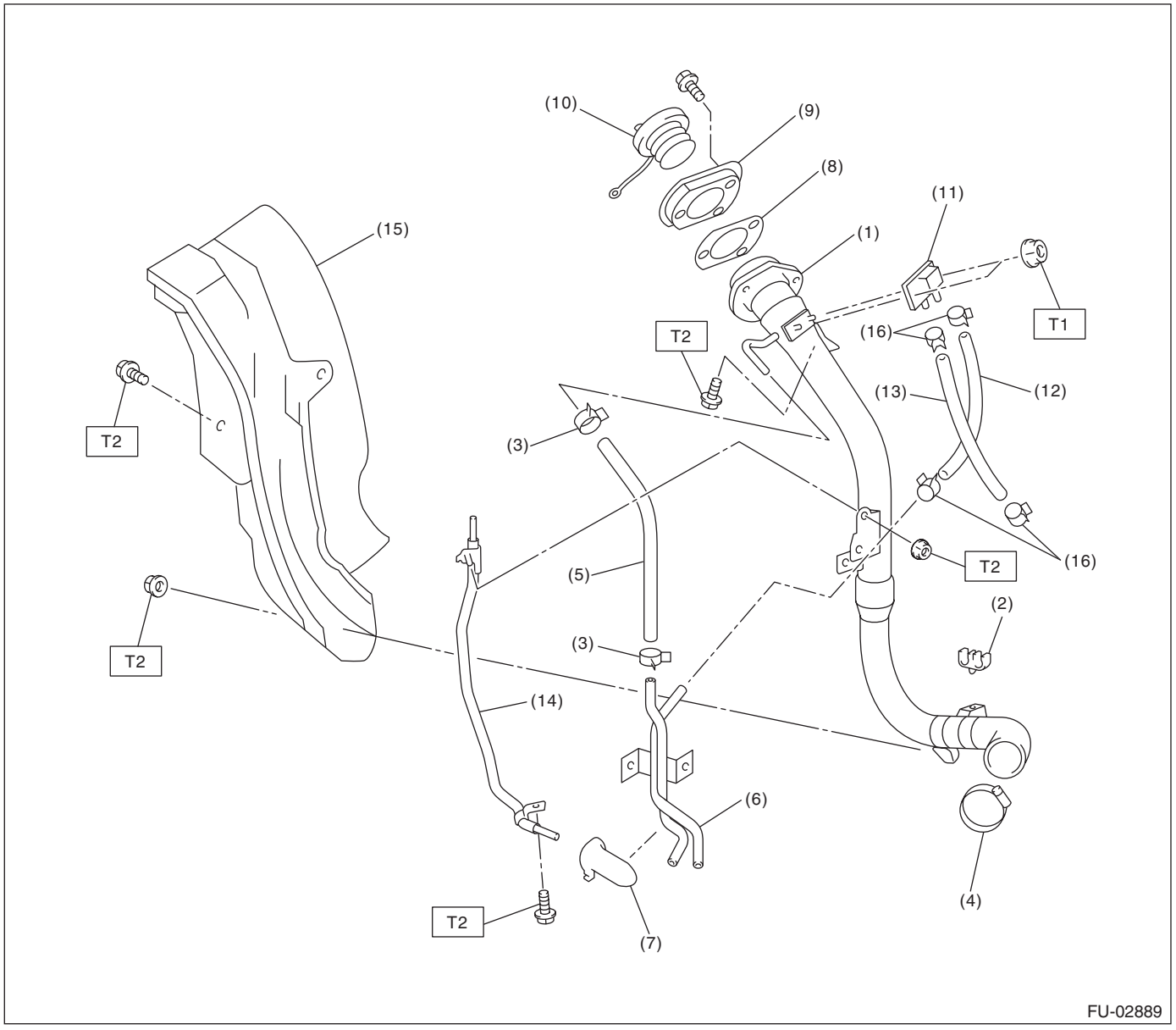

(1)	Fuel filler pipe ASSY	(8)	Filler pipe gasket	(15)	Fuel pipe protector
(2)	Evaporation hose holder	(9)	Filler ring	(16)	Clamp
(3)	Clip	(10)	Filler cap		
(4)	Clamp	(11)	Shut valve		
(5)	Evaporation hose A	(12)	Evaporation hose B		
(6)	Evaporation pipe	(13)	Evaporation hose C		
(7)	Evaporation pipe holder	(14)	Joint pipe		

Tightening torque:N·m (kgf-m, ft-lb)
T1: 4.4 (0.45, 3.3)
T2: 7.5 (0.76, 5.5)

C: CAUTION

- Wear appropriate work clothing, including a cap, protective goggles and protective shoes when performing any work.
- Remove contamination including dirt and corrosion before removal, installation or disassembly.
- Keep the disassembled parts in order and protect them from dust and dirt.
- Before removal, installation or disassembly, be sure to clarify the failure. Avoid unnecessary removal, installation, disassembly and replacement.
- Vehicle components are extremely hot after driving. Be wary of receiving burns from heated parts.
- Be sure to tighten fasteners including bolts and nuts to the specified torque.
- Place shop jacks or rigid racks at the specified points.
- Before disconnecting connectors of sensors or units, be sure to disconnect the ground cable from the battery.
- Place “NO OPEN FLAMES” signs near the working area.
- Prepare a container and cloth to prevent scattering of fuels when performing work where fuels can be spilled. If the fuel spills, wipe it off immediately to prevent from penetrating into floor or flowing out for environmental protection.
- Follow all government and local regulations concerning disposal of refuse when disposing fuel.

D: PREPARATION TOOL

ILLUSTRATION	TOOL NUMBER	DESCRIPTION	REMARKS
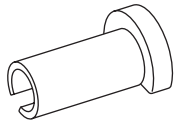 ST42099AE000	42099AE000	CONNECTOR REMOVER	Used for disconnecting quick connector in the engine compartment.